Design and Analysis of Cyclone Separator

[1]Moiz Hussain, [1]Mayur K M, [1]Pradeep D, [1]Prithvi B [2]Srinivas S
[1]Student, School of Mechanical Engineering, REVA University, Bangalore-560064
[2]Assistant Professor, School of Mechanical Engineering, REVA University, Bangalore-560064

Abstract— Cyclone Separator is a commonly used device to separate dust particles from gas and dust flow. The project presents the design and development of Cyclone Separators based on CFD along with simulations. The present work is based on the performance of flour mill Cyclone Separator for different inlet velocity. In the present investigation the characteristics of the standard cyclone are studied and its effect on performance parameters like pressure drop and efficiency. Cyclone Separator is designed with single tangential inlet and two outlets at the barrel top and bottom area. The study was performed for air-dust flow, based on an experimental study available in the literature, where a conventional Cyclone Separator model was used. Simulation of flow was done with the help of CFD software and verification was done with the help of Theoretical analysis. From our analysis, it is observed that with an increase in inlet velocity from 8-24 m/s the efficiency significantly increases by 5-7% and with an increase in particle diameter of 5 to 25 micrometer the efficiency increases, to obtain proper working of device it is suggested to be operated within inlet velocity range of 10-15 m/s as the pressure drop values are close to theoretical values.

Index Terms— Cyclone, Pressure drop, Double symmetrical inlet, Tangential outlet, Collection efficiency

1 Introduction

Cyclone separators are devices that have been around since the late 1800s. They are widely used in many industrial applications where it is necessary to remove the dust or particles from gases. These devices are simple with no moving parts and are easy to maintain. Although the construction of these devices is simple, the physics governing the flow process in them is complex. Cyclones have been the subject of study over the years yet in practice most design is based on empirical information. There are several standard geometries whose performance is well documented and it is common to use scaling laws to adjust the standard designs to a specific set of operating conditions. In the production areas, air may contain large amounts of small solid particles of dust. By using such air for cooling electrical equipment, the cooling channels and radiators overlap with the dust layer and greatly reduce the cooling capacity. There are cases when dust, fluffs, and various matters of different shapes block the ventilation ducts. High-quality air preparation is required to increase the cooling stability of electrical equipment. Various filters are widely used, but filters have a limited filtering time, they have to be cleaned regularly, and air filters greatly increase the air resistance.

1.1 Working

Cyclone separators provide a way of removing particulate from the air or other gas streams at low cost and low maintenance. Cyclones are basically centrifugal separators, consists of an upper cylindrical part mentioned because the barrel and a lower conical part mentioned as cone. They simply transform the inertia force of gas-particle flows to a force by means of a vortex generated within the cyclone body. The particle-laden air stream enters tangentially at the highest of the barrel and travels downward into the cone forming an outer vortex. The increasing air velocity within the outer vortex leads to a force on the particles separating them from the air stream. When the air reaches the bottom of the cone, it begins to flow radially inwards and out the highest as clean air/gas while the particulates fall under the dust collection chamber attached to the bottom of the cyclone separator. However, some of the dust rolls up due to the secondary airflow in the boundary and flows through the exit pipe. Hence an airlock is used to prevent that flow. The centrifugal effect, which is responsible for separating the dust particles, depends on the tangential velocity of particles.

2 Literature Survey

Bharat Raj Reddy Dere [1] et al worked on the inlet dimensions and checked the variation of pressure with the inlet dimensions. The maximum pressure in cyclone falls drastically by decrease in the inlet dimensions. For every 2mm decrease in inlet height and 1mm decrease of width gives 20% decrease in the pressure. So, inlet dimensions show large effect on the performance of the cyclone.

Mahesh R Jadhav [2] worked on the design of cyclone and study of its performance parameters, it is observed that the pressure drop and cyclone efficiency varies with inlet velocity. The efficiency of cyclone increases with the decrease in dimensions of cylinder body diameter, cyclone inlet width, operating temperature, and cyclone width inlet. The pressure drop increases with the increase in inlet velocity, but pressure drop decreases significantly with the rise in temperature. A comparison of performance, between symmetrical inlet cyclone and single inlet cyclone, shows that the symmetrical inlet cyclone is optimum than the conventional cyclone with a single inlet.

Muhammad I. Taiwo [3] et al has observed that the design and analysis of cyclone dust separator and have often been regarded as low-efficiency collectors, However, efficiency varies greatly with particle size and cyclone design. Advanced design work has greatly improved cyclone performance. Some cyclone separator is manufactured with efficiencies greater than 95% but for particles larger than 5 microns, and others that regularly achieve an efficiency of 85% for particles larger than 14 – 20 microns.

Svarovsky [4], et al has found that if the centrifugal force is greater than drag force particle moves towards the wall then pulled down in the axial stream and exit in the underflow. He has also observed that particles rotate at a radius where centrifugal force is balanced by drag force and larger, denser particles move selectively towards the wall.

Lappe [3], has concluded that in cyclones the flow is turbulent and friction factors assumed to give good results this is not true for small cyclones. In laminar flow, the influence of the operating parameters influences cyclone efficiency more than turbulent case this makes the prediction of efficiency and pressure drop very difficult especially in a small cyclone. Most of the models of cyclone separator depend on empirical or semi-empirical equations. The cyclone models calculate efficiency and predict the cutoff size which corresponds to 50% efficiency. His theories consider cut size d50 which corresponds to the diameter of particle where 50% of particles smaller and 50% of particles greater than that size will be collected.

3 METHODOLOGY

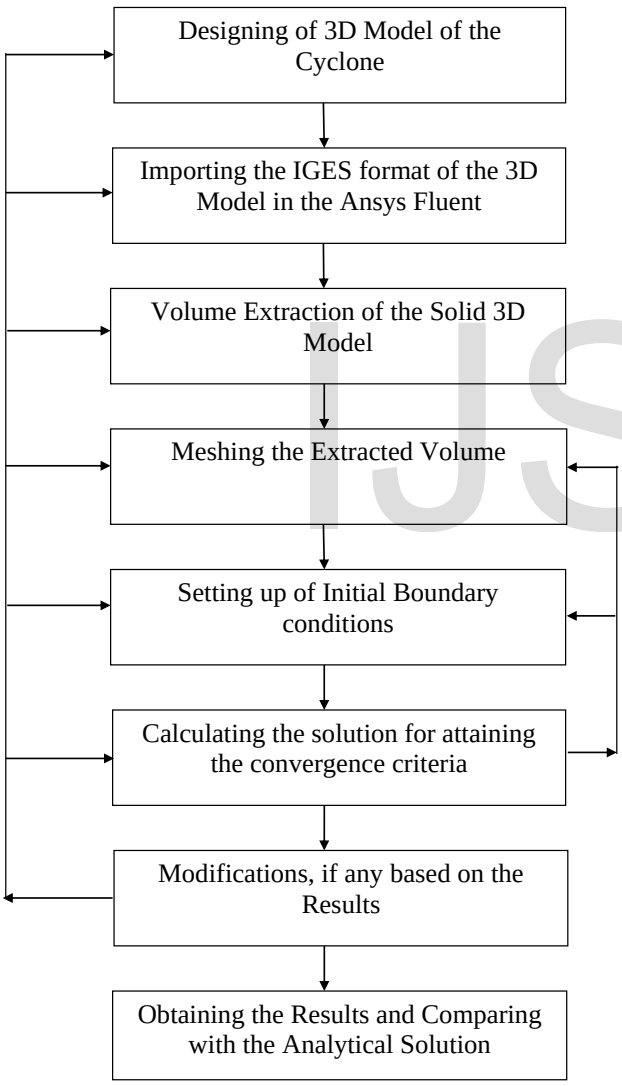

4 THEORITICAL ANALYSIS

4.1 EFFICIENCY

The diameter of particle collected with 50% efficiency d_{pc} in m & diameter of particle interest d_p in m are the key elements of this calculation. Efficiency (η) is defined as the separation of fraction of particles of a given size due to the force caused by the spinning gas stream in a cyclone.

Efficiency = $1/(1 + (d_{pc} + d_p)^2)$.

Where,
η – Particle collection efficiency in %.
d_{pc} – Diameter of particles collected with 50% efficiency in m.
d_p – Diameter of particle interested in m.

4.2 CUT DIAMETER

The cut diameter of the cyclone is defined as the size of the particle which is collected with collection efficiency of 50%. It is an indicator of the size range of particles that can be collected. It is a convenient way of defining as it provides information on the effectiveness of a particle size range. A recurrently used expression for cut off diameter is

$$d_{pc} = \left(\frac{9\mu B_c}{2\pi N v_i(\rho_P - \rho)}\right)^{1/2}$$

μ = viscosity (Pa-s)
B_c = inlet width (m)
N = effective number of turns (5-10 for common cyclone)
v_i = inlet gas velocity (m/s)
ρ_P = particle density (kg/m³)
ρ = gas density (kg/m³)

The value of N (the number of turns) must be known in order to solve the equation for dpc . Given the volumetric flow rate, inlet velocity, and dimensions of the cyclone separator, N can be easily calculated. Values of N can vary from 1 to 10, with typical values in the range of 4 to 5.

4.3 PRESSURE DROP

The cyclone pressure drop is a function of the cyclone separator dimensions and its operating parameters. The pressure drop over a cyclone is caused by the change in the area, wall friction, change of the flow direction and the dissipation in the vortex finder (outlet tube). In general, the term 'pressure drop' means a drop in total pressure i.e. Static pressure and Dynamic pressure. In other words, the pressure loss during the flow between inlet and outlet.

$$H_v = K\frac{HW}{{D_e}^2} \qquad \Delta P = \frac{1}{2}\rho_g {V_i}^2 H_v$$

Where,
H_v = pressure drop, expressed in number of inlet velocity heads

K = Constant that depends on Cyclone configuration and operating conditions (K=12 to 18 for a standard tangential-entry cyclone)
H = Height of inlet in m.
W = Width of inlet in m.
D_e = Diameter of cyclone in m.
ρ_g = Density of gas in kg/m3.
V_i = Inlet velocity in m/s.

5 OBSERVATIONS

5.1 PRESSURE DROP

The static pressure can be measured easily, whereas experimentally it is difficult to measure the dynamic pressure at the exit. The pressure drop over a cyclone is normally divided into three sections:

- Losses in the entry,
- Losses in the separation space (the main cyclone separator body), and
- Losses in the vortex finder.

The entry losses in cyclones with tangential inlets are negligible since the flow is linear, and it moves to the main cyclone body without many obstructions, the linear flow transforms into a swirl flow once the flow enters the cyclone body this is mainly due to the shape of the body. So, the dynamic pressure increases accordingly. But this increase in dynamic pressure is lost due to the friction in the walls. Therefore, the losses in the cyclone body are much higher to the other section. In the vortex finder, the clean gas comes out through it, but due to the swirl present in the flow, some pressure is lost. Thus, these are the main sections of the pressure drop. The pressure drop over a cyclone, Δp, is proportional to the square of the volumetric flow rate, as it is in all processing equipment with turbulent flow.

5.2 CYCLONE EFFICIENCY(η)

Cyclone Efficiency Overall separation efficiency the overall efficiency is usually the most important consideration in the industrial process. Let us consider the mass balance of solid particles in a cyclone. According to Hoffmann and Stein Mf, Mc, and Me are the mass flow rate of the feed, mass flow rate of particle collected, and mass flow rate of escaped particles respectively. Then the force balance of solid particle over the cyclone separator are

$$Mf = Mc + Me$$

The overall separation efficiency can be calculated as the mass fraction of feed is successfully collected.

$$\eta = \frac{M_C}{M_F} = 1 - \frac{M_C}{M_F} = \frac{M_C}{M_C + M_E}$$

Factors affecting the cyclone collection efficiency Various factors are observed to affect the cyclone efficiency are, The prime factor is inlet velocity affecting the pressure drop and hence the cyclone efficiency. Efficiency increases with an increase in velocity as centrifugal force increases but this also increases the pressure drop which is not favorable.
reducing the cyclone diameter increases centrifugal force and hence efficiency. Gas viscosity is also a factor which affects efficiency. With a decrease in viscosity, efficiency increases. This is due to a reduction in drag force with a reduction in viscosity. The decrease in temperature will increase the gas density. One may be tempted to conclude that this will increase efficiency as viscosity decreases. But an increase in temperature also decreases the volumetric flow rate and thereby decreasing efficiency. The important factor affecting efficiency is particle loading. With high loading the particles collide with each other more and results in pushing of particle towards the wall. This, in turn, increases efficiency

6 EXPERIMENTAL WORK

6.1 DESIGN AND ANALYSIS

The method of design and analysis carried out on this base plate are as follows:
STEPS FOR CYCLONE SEPARATOR FLUENT ANALYSIS:

1) Reading the 2D drafting and understanding various geometrical features.

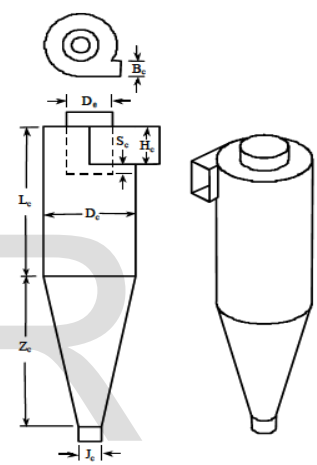

Fig 6.1: 2D Drawing of Cyclone Separator

Fusion 360 is a cloud-based 3D CAD, CAM & CAE design tool from Autodesk. It is available on a number of platforms including Windows, Mac & In-Browser. It quickly recapitulates on design ideas with its sculpting tools to explore form and modeling tools to create finishing features also test fit and motion, perform simulations, create assemblies, make photorealistic renderings, and animations. It also creates tool paths to machine your components or uses the 3D printing workflow to create a prototype. It is functionally similar to other 3D software like Solid works, Siemens NX, Inventor, or Catia. It is a very full-featured program and is available to hobbyists and start-up businesses for no cost. Highlight features include Parametric Modelling, Program tool paths for CNC machines, 3D Rendering, Export STL models for the 3D Printer.

Fig 6.2: 3D Model of Cyclone Separator

The given 2D draft is then converted into a 3D model and is rendered accordingly as shown in Figure 6.1 & Figure 6.2

Material and its Properties

The materials considered are mild steel and stainless steel. The decision of choosing between the above two steel depends on the weight of the device. If mild steel is used then the thickness of sheet metal will be more compared to the thickness of stainless sheet metal. The material used must be tough enough to withstand the high velocity and pressure, materials such as cast iron cannot be used as it is heavy and brittle which cannot withstand the impact of high velocity.

Properties of materials used in Cyclone Separator:

- High and low-temperature resistance
- Ease of fabrication
- High Strength
- Aesthetic appeal
- Hygiene and ease of cleaning
- Recyclable

6.2 VOLUME EXTRACTION

For appropriate analysis the given model cannot be used for flow analysis, in order to perform the analysis, the given model needs to be an enclosed one. For this reason, we use the Space claim software. This software is available in ANSYS v18.2 where it provides the necessary tools for geometry preparation. The extracted volume is shown in Figure 6.3

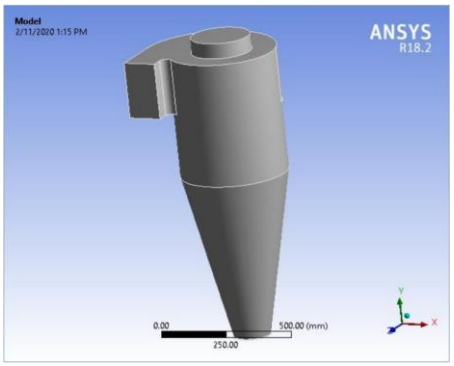

Fig 6.3: Volume extraction of the Cyclone Separator in Space Claim

Volume	0.13303 m³
Centroid X	-2.1723e-002 m
Centroid Y	-0.10679 m
Centroid Z	-4.6481e-003 m

Table 6.1: Volume extraction Properties

6.3 SETUP

In this type of analysis, the required viscous model for an accurate solution is K-∈ model.

Significance: K-∈ turbulence model is the most common model used in Computational Fluid Dynamics (CFD) to simulate turbulent conditions. It is a two-equation model that gives us a general description of turbulence by means of two transport equations (PDEs). The Realizable k-ε model is better. This is due to the fact that better allows describing a swirling flow of the fluid. Suitable for complex shear flows involving rapid strain, moderate swirl, vortices and locally transitional flows, robust, economical and more reasonably accurate than many sub-models available i.e. combustion, buoyancy, compressibility, etc. but mediocre results for complex flow involving severe pressure gradients, strong streamline curvature, swirl, and rotation.

Boundary Conditions

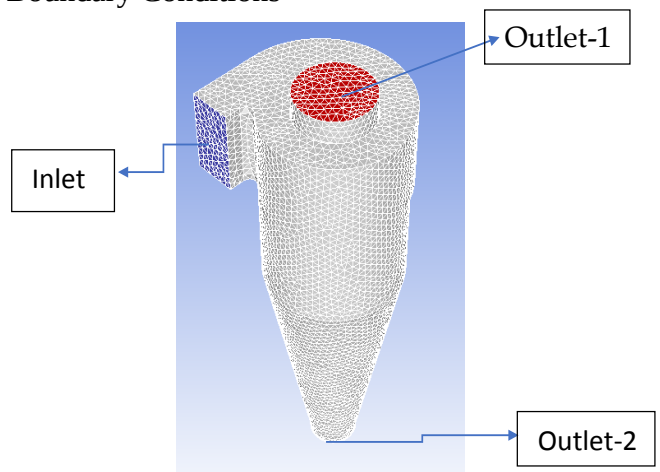

Fig 6.5: Boundary Conditions of Cyclone Separator

The boundary conditions are applied at the given surfaces as shown in figure 6.5. The inlet velocity is within the range of 8-24 m/s and outlets are at 1bar pressure. The outlet-2 is for dust collection and outlet-1 is for air extraction

7 RESULT

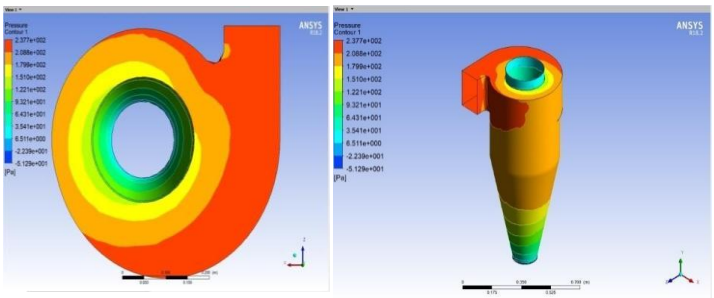

Fig 7.1: Pressure Contour of Cyclone Separator

Figure 7.1 shows the pressure contour acting on the volume with respect to the particles and air flowing through it. The maximum pressure is observed at the inlet cross-section and gradually reduces as it flows down the separator.

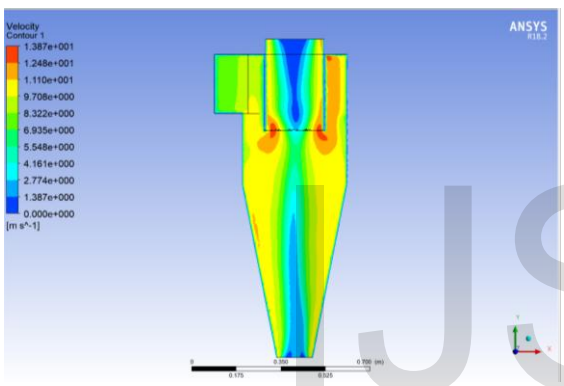

Fig 7.2: Velocity Contour of Cyclone Separator

As shown in Figure 7.2 Velocity Contour shows the velocity of particles and air flowing through the volume. As air enters the volume, velocity increases as governed by the boundary layer equation. The Flow continues on to form a vortex in a clockwise direction due to this a counter vortex is formed whose velocity is low compared to the main vortex.

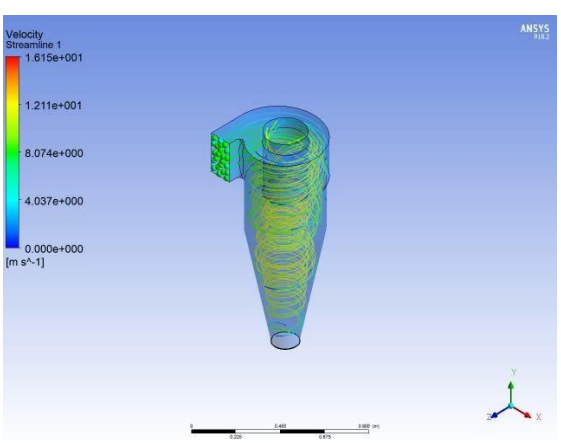

Fig 7.3: Flow of air through Cyclone

Figure 7.3 shows the flow of air through the cyclone. Air enters the cyclone at the inlet tangentially and swirls down the cyclone, the velocity increases with respect to the gradual decrease in the diameter of the cyclone.

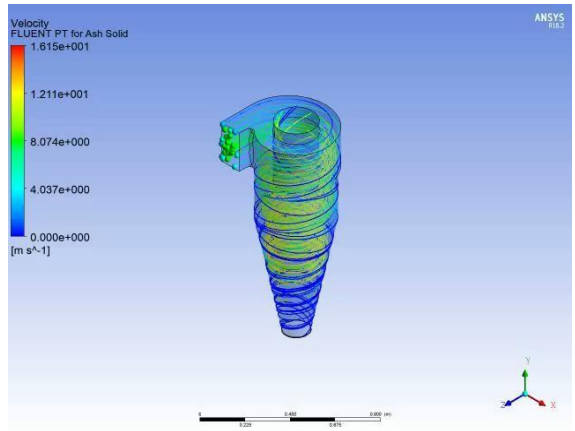

Fig 7.4: Particle Flow through Cyclone

Figure 7.4 shows the flow of particulate matter through the cyclone. Due to centrifugal force the particles hit the walls of the cyclone and lose its momentum thus falling down and get deposited in the collector.

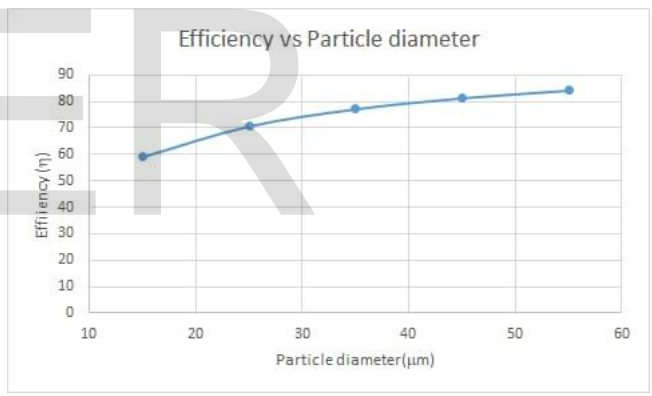

Fig 7.5: Efficiency v/s particle diameter

As observed from the figure 7.5, it is clear that the efficiency increases with increase in particle diameter.

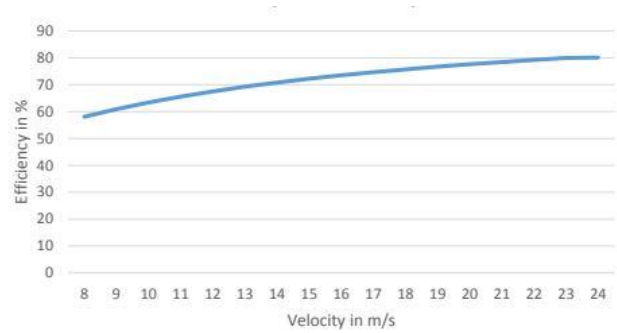

Fig 7.6: Efficiency v/s velocity

As observed from the figure 7.6, efficiency is inversely proportional to inlet velocity.

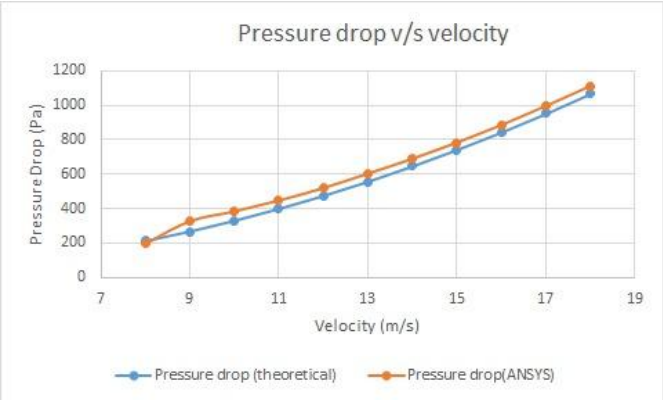

Fig 7.7: Pressure drop v/s velocity

From the graph (Figure 7.7) it is observed that the theoretical plot deviates from the ANSYS plot. The following might be the reasons why there is a deviation,

- Turbulences
- Surface wall roughness
- Kinematic losses during real time flow

Thus, pressure drop is proportional to inlet velocity in both theoretical as well as ANSYS results.

8 CONCLUSION

- It is observed from the efficiency formula that an increase in the density, number of turns increases the device's efficiency which is similar to the conclusion which can be made from centrifugal force equation (i.e., increase in particle weight increases centrifugal force which helps in better separation).

- Pressure drop was also calculated for the device; these values were partially similar compared to the simulation results with a percentage error of 5% to 7%

- The pressure contour was taken from ANSYS to understand where the pressure was large in the device, it was observed that the pressure was large at the entrance turn as the particle collides the wall with high velocity.

- From both theoretical and experimental results, it was clear that the device should be operated at inlet velocity in the range 10-15 m/s as the efficiency is high, the pressure drop is low and is economically appropriate to achieve these inlet velocities thus, maintaining its efficiency

9 REFERENCES

1. Bharat Raj Reddy Dere, "Design and Analysis of Cyclone Separator", "IJERT" ,Vol -3,Issue-8, 2014
2. Mahesh R. Jadhav, "Design of Cyclone and Study of its Performance Parameters", "International Journal of Mechanical Engineering and Robotic Research", Vol.3, No. 4 2014
3. Muhammad I. Taiwo, "Design and analysis of cyclone dust separator", "American Journal of Engineering Research (AJER)", Vol-5, Issue-4, 2016
4. Svarovsky, "Solid Liquid Separation", "ScienceDirect" , 4th edition, chapter-6, Page 191-245, 2001
5. Lapple, "Processes use many collector types", "Chemical Engineering", Vol-58, Issue-5, Page 144-151, 1951